FMC

Weco® Butterfly Valves and Actuators

Field-proven dependability you demand quality service you deserve

Catalog BV-9/98

Manufacturing Quality ISO-9001 Systems Certification

Available from stock in the sizes, styles, and materials you need

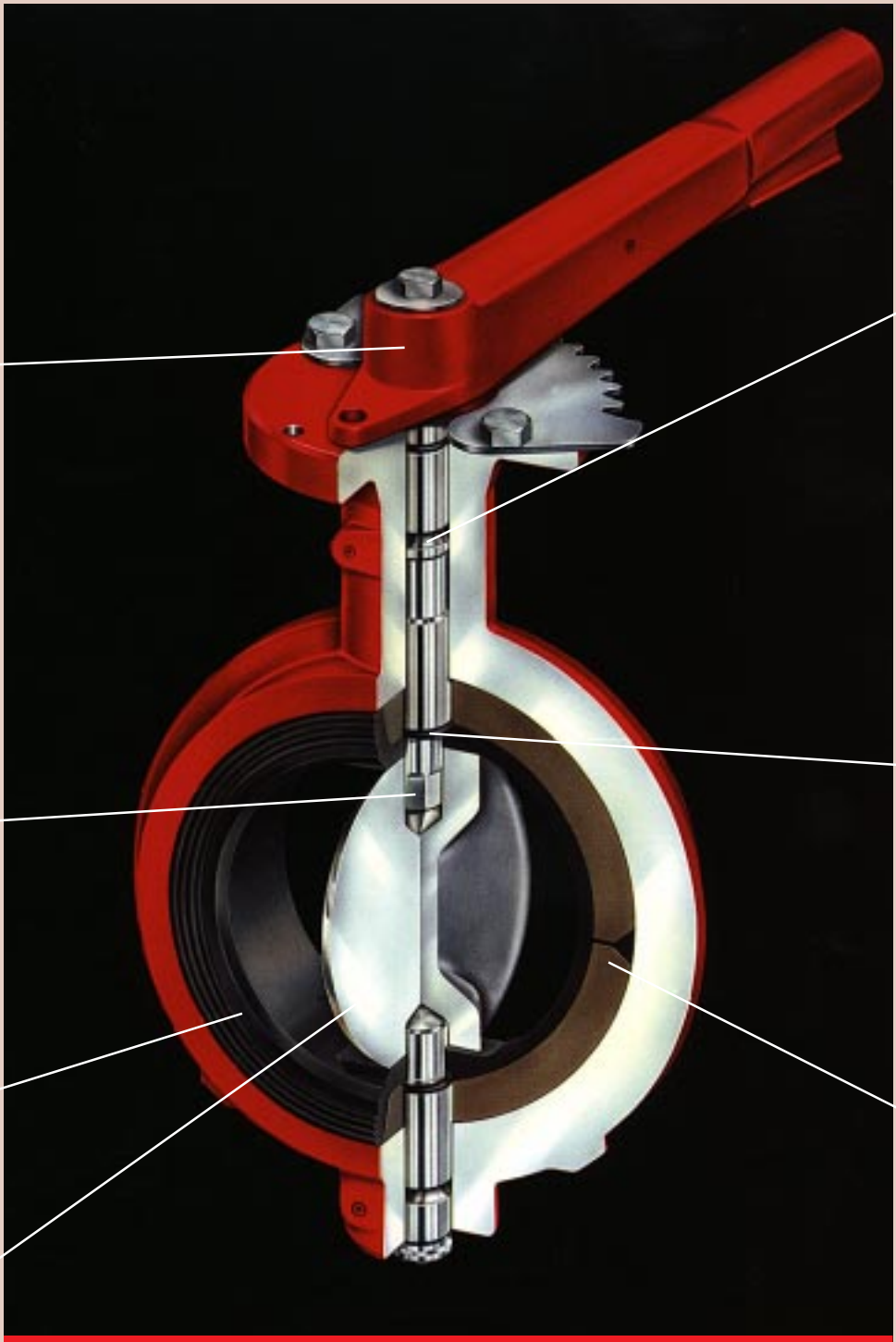

Choice of operators, including gear operators, pneumatic actuators, vane actuators, standard and throttling handles.

Dual stem with upper and lower tangential pins allows a self-centering disc. This design provides equal sealing pressure 360 ° around the disc, assuring positive shut off and exlending service life.

Hex drive provides positive disc movement without in-line pins, screws, or bolts. All stem parts are out of the flow path.

Triple seat design (O-ring, undersized stem holes in seat, corresponding flats on seat and disc hubs) provides three, completely independent seals, isolating the stem from line fluid.

Ribbed seat face eliminates the need for flange gaskets, insures a leak-proof installation.

Streamlined disc minimizes turbulence and pressure drop for flow efficiency.

Patented elastomer seat with two-piece, hard phenolic back-up eliminates seat walking and allows the seat to expand under pressure, making the valve body the pressure containing component.

Weco Model 12 Butterfly Valve

How today's FMC is meeting your -"demands" with dependable Weco butterfly valves, operators and actuators

Weco butterfly valves have been solving fluid control problems in oilfield and general industrial applications for over 20 years. Today's FMC is putting that experience to work for you in more ways than ever before...meeting your changing needs with dependable Weco butterfly valves, operators, and actuators.

Field-proven features plus "new technology" in every valve

When you specify Weco butterfly valves, you get the ultimate in dependable, economical flow control. That's because FMC combines the field-proven features and benefits of Weco valves (shown on facing page) with technical advances in engineering and manufacturing.

From computer-aided engineering (CAE) and computeraided design/computer-aided manufacturing (CAD/CAM) to automated manufacturing cells and high-density warehouse systems, today's FMC is putting "new technology" into every Weco butterfly valve. Technology that is helping FMC improve deliveries and provide unsurpassed service. The result: You get the field-proven dependability you demand and the quality service you deserve with every Weco valve.

Complete range of sizes and styles

Meeting your "demands" means having the butterfly valves you need, when you need them. Weco butterfly valves are available from stock in 2- through 24-inch sizes and can handle working pressures to 175 psi. Wafer, notched, and lugtype body styles make it easy for you to find the valve that meet your requirements for new or existing piping systems. Short and long neck models and stem extensions are available.

Regardless of size or style, Weco butterfly valves provide outstanding flow characteristics due to low profile disc design.

Materials to meet your service requirements

To insure that FMC meets your exacting service requirements, Weco butterfly valves are available in a wide variety of materials. Valve bodies, discs, stems, and seats all can be individually matched to your specific operating conditions, including: temperature range, type and concentration of fluid, and various flow conditions. All FMC materials of construction meet ASTM and AISI standards.

Wide choice of operators and actuators

All models and sizes of Weco butterfly valves can be equipped with Weco operators and actuators as well as other brands of actuators. You can choose from standard and throttling handles, gear operators, chain-wheel operators, pneumatic actuators, vane-type actuators, special controllers, and positioners as required.

Fast, simple field repair

Weco butterfly valves provide dependable service under the harshest of applications. Because there are no in-line screws, pins, or bolts, little or no maintenance is required. If the valve should need repair, it can be completely reconditioned in the field using interchangeable, stock parts. No special tools are needed.

Contents

Weco Model 12 and 12N Valves 2
Weco Model 22 Valves 4
Weco Model 22L Valves 6
Weco Standard and Throttling Handles 8
Weco Gear Operators and Stem Extensions 9
Weco Pneumatic Actuators 10
Weco Vane and Other Actuators 11
Weco Sizing Information 12
Ordering Information 16
Terms and Conditions 17

Weco Model 12 and 12N Butterfly Valves

Model 12

Short neck, wafer -style body; 2- through 16-inch sizes

Recommended service and special features
General on/off and throttling services from 1 mm absolute vacuum to 175 psi (12 bar) cold working pressure at temperatures from -40 °F to 300 °F, depending on seat material; 14- to 16-inch sizes limited to 150 psi (10 bar) cold working pressure; All Model 12 valves are self-centering and mount between 125 lb or 150 lb ANSI flanges; Model 12 bodies can be notched to fit between special flanges. Special materials are available to meet 285 PSIG-consult factory for details.

Model 12N

Short neck, notched body; 2- through 6-inch sizes

Recommended service and special features
General on/off and throttling service from 1 mm absolute vacuum to 175 psi (12 bar) cold working pressure at temperatures from -40°F to 300 °F, depending on seat material; Standard Model 12N is notched to fit between light weight flanges.

Dimensions

Dim.	Valve Size, in.										
	2	2½	3	4	5	6	8	10	12	14	16
A	4 11/32	5⅛	5 29/32	7 9/32	7 9/32	7 25/32	9 11/32	10 27/32	12 9/32	14 31/32	17 5/16
B	3	3 11/32	3⅜	4¼	4 13/16	5 9/16	7	8¼	9¾	10⅜	11 15/16
C	4⅛	4⅞	5⅛	6⅞	7⅛	8¼	11	13⅛	16⅛	17 11/16	20⅛
D	2 9/16	2½	3 9/16	4 9/16	5 9/16	6 9/16	8 9/16	10	12	13¼	15¼
E	⅛ Sq.	⅛ Sq.	⅛ Sq.	⅛ Sq.	⅛ Sq.	⅛ Sq.	⅛ Sq.	⅛ Sq.	1⅛ Sq.	1⅛ Sq.	2 Dia. ½ Keyway
F	4	4	4	4	4	4	6	6	6	6	8
G	1 1/32	1 1/32	1 1/32	1 19/32	1 19/32	1 19/32	1 19/32	1 19/32	1 19/32	1 19/32	3 9/16
H	1⅛	1¼	1¼	2	2⅛	2⅛	2½	2½	3	3	4
I	5/16	5/16	5/16	5/16	5/16	5/16	9/16	9/16	9/16	9/16	13/32
J	3¼	3¼	3¼	3¼	3¼	3⅛	5	5	5	5	6½
K	3⅛	—	4⅜	6⅛	6 29/32	8½	—	—	—	—	—
L	4	—	6	6	6	8	—	—	—	—	—
M	1/16	—	1/16	⅛	⅛	⅛	—	—	—	—	—

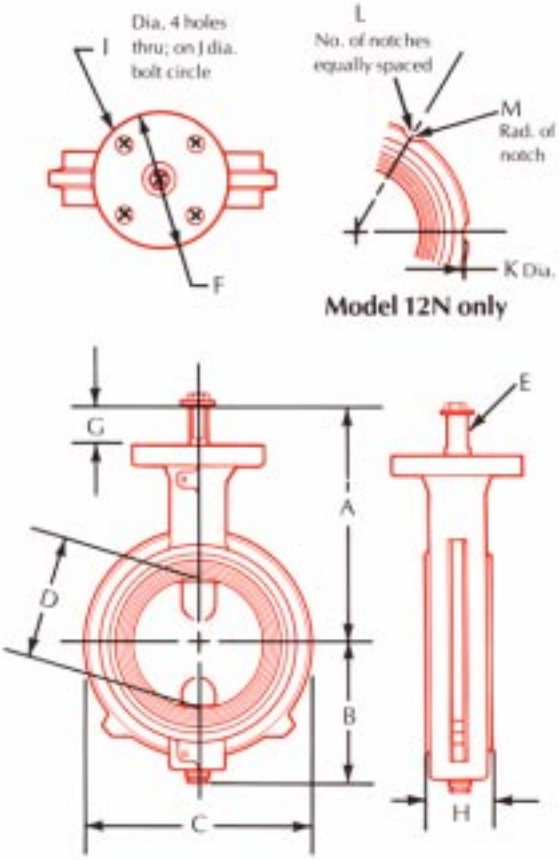

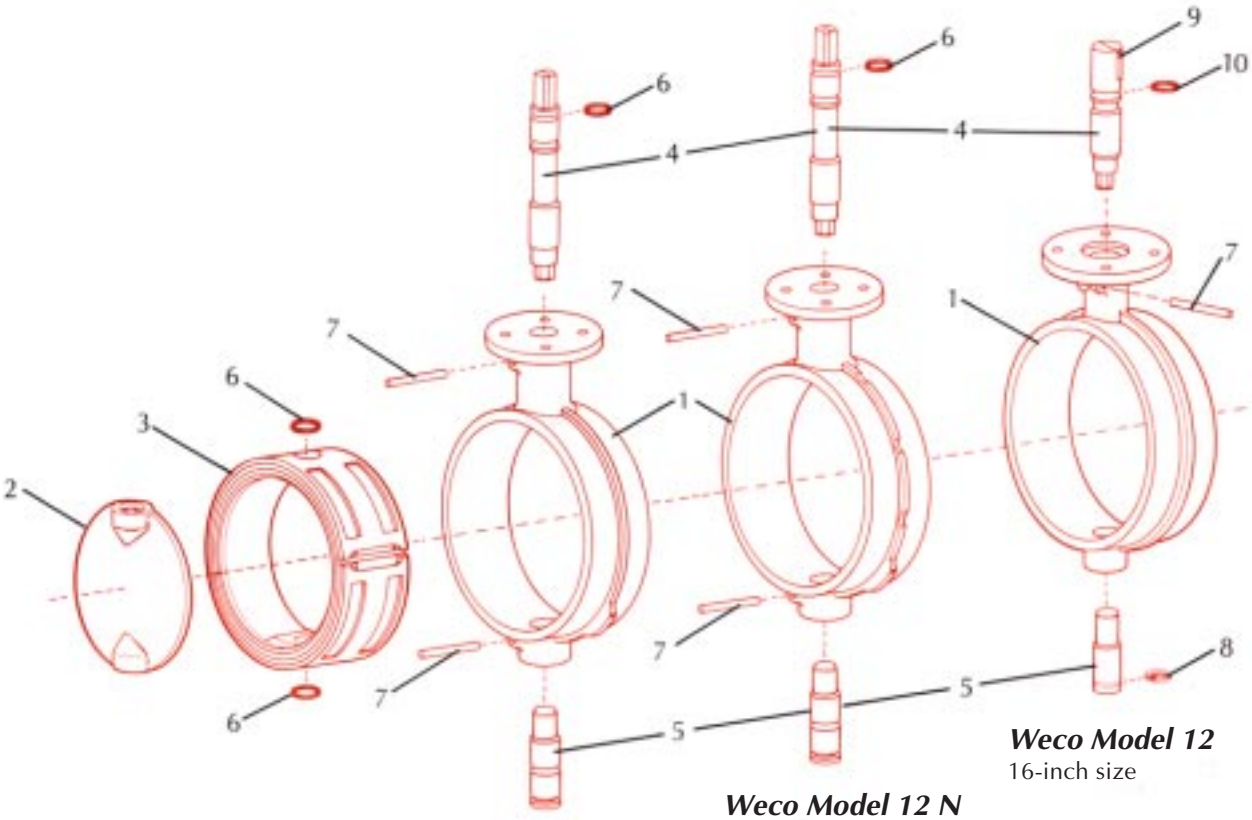

Weco Model 12
16-inch size

Weco Model 12 N
2- to 6-inch sizes

Weco Model 12
2- to 14-inch sizes

Materials of Construction

Valve Part	Standard Material	Optional[1] Material
Seat and O-ring	Nitrile (Buna N) (-20°F to 200°F)	Food grade nitrile Carboxylated nitrile Hypalon TFE Neoprene (standard or food grade) EPDM (Epoxy backed to 400°F) Fluorocarbon (Epoxy backed to 400°F)
Body	Ductile iron	Steel Aluminum
Stem (upper and lower)	416 stainless steel	316 stainless steel
Disc	Ductile iron Aluminum bronze	316 stainless steel, TFE encapsulated, 17-4PH Halar coated ductile iron

NOTES: 1. Other materials available; consult factory.
Halar is a registered trademark of Ausimont.
Hypalon is a registered trademark of DuPont.

Butterfly Valve Components

Ref. No.	Component Description	Number Required (Notes)
1	Body	1
2	Disc	1
3	Seat	1
4	Upper Stem	1
5	Lower Stem	1
6	O-ring	3[3]
7	Retainer Pin	2[2]
8	Retainer Snap Ring	1[3]
9	Locking Key	1[3]
10	Upper Stem Seal	1[3]

NOTES: 1. 16-inch valve only uses 2.
2. 12- and 14-inch valve uses 4; 16-inch valve uses only 1.
3. Applies to 16-inch valve only.

Weco Model 22 Butterfly Valves

Model 22

Long neck, wafer body; 2- through 12-inch sizes

Recommended service and special features
General on/off and throttling services from 1 mm absolute vacuum to 175 psi (12 bar) cold working pressure re at tem peratures from - 40 °F to 300 °F, depending on seat material; All Model 22 valves mount between 125 lb to 150 lb ANSI flanges; Neck length allows for 3-inches pipe insulation.

Dimensions

Dim.	Valve Size, in.								
	2	2½	3	4	5	6	8	10	12
A	7 9/32	7 25/32	8 1/16	9 9/32	9 27/32	10 9/32	11 19/32	12 23/32	14 11/32
B	3	3 1/32	3⅛	4¼	4 1/16	5 1/16	7	8¼	9¼
C	4⅛	4⅞	5⅜	6⅞	7¼	8¼	11	13⅜	16 1/16
D	2 1/16	2½	3 1/16	4 1/16	5 1/16	6 1/16	8 1/16	10	12
E	⅛ Sq.	⅛ Sq.	⅛ Sq.	⅛ Sq.	⅛ Sq.	⅛ Sq.	⅜ Sq.	⅜ Sq.	1⅛ Sq.
F	4	4	4	4	4	4	6	6	6
G	1 1/32	1 1/32	1 1/32	1 9/32	1 9/32	1 9/32	1 9/32	1 9/32	1 9/32
H	1⅛	1¼	1¼	2	2⅛	2⅛	2½	2½	3
I	3/16	3/16	3/16	3/16	3/16	3/16	9/16	9/16	9/16
J	3¼	3⅛	3¼	3¼	3¼	3¼	5	5	5

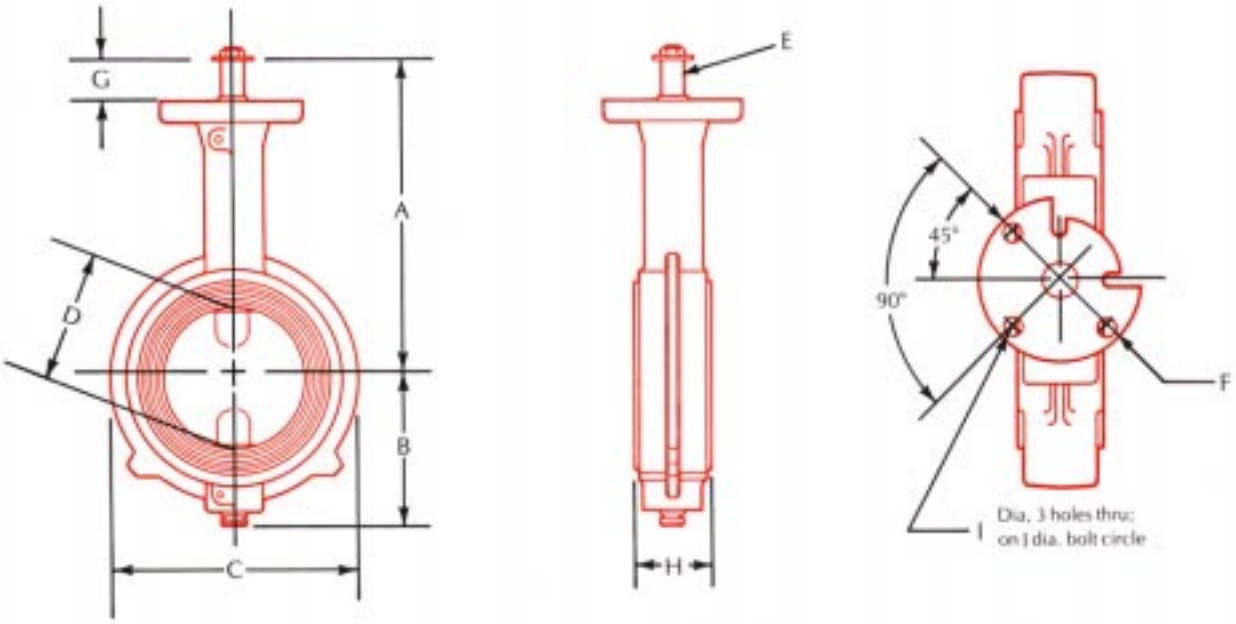

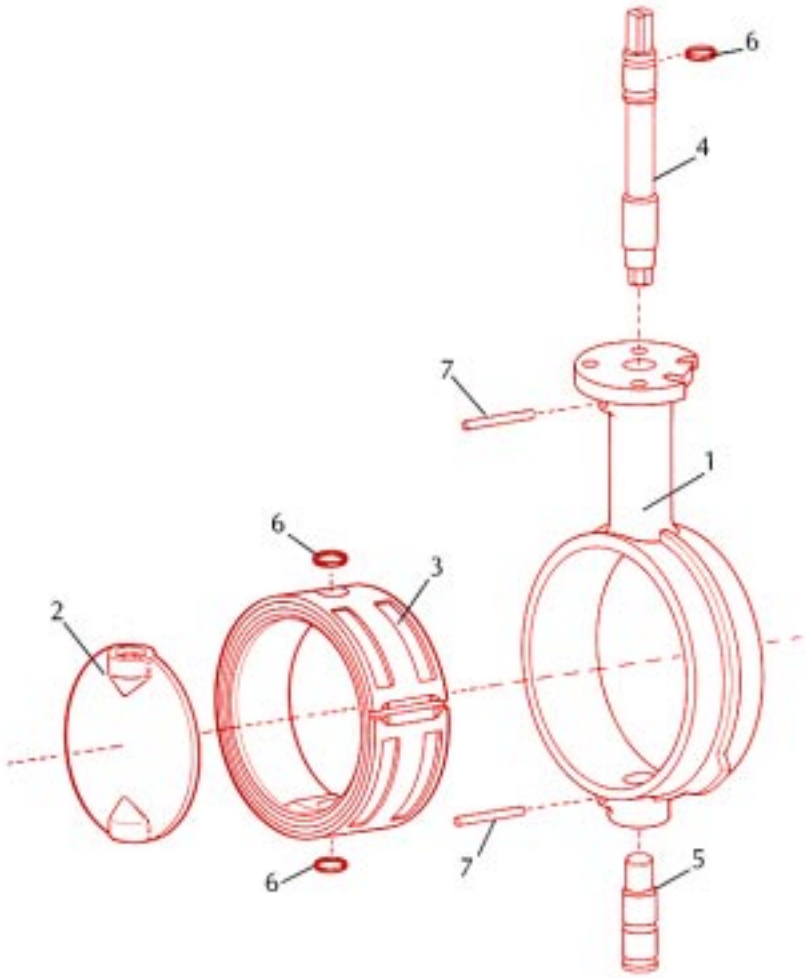

Weco Model 22
2- to 12-inch sizes

Materials of Construction

Valve Part	Standard Material	Optional[1] Material
Seat and O-ring	Nitrile (Buna N) (-20°F to 200°F)	Food grade nitrile Carboxylated nitrile Hypalon TFE Neoprene (standard or food grade) EPDM (Epoxy backed to 400°F) Fluorocarbon (Epoxy backed to 400°F)
Body	Ductile iron	Steel Aluminum
Stem (upper and lower)	416 stainless steel	316 stainless steel
Disc	Ductile iron Aluminum bronze	316 stainless steel, TFE encapsulated, 17-4PH Halar coated ductile iron

NOTES: 1. Other materials available; consult factory.
Halar is a registered trademark of Ausimont.
Hypalon is a registered trademark of DuPont.

Butterfly Valve Components

Ref. No.	Component Description	Number Required
1	Body	1
2	Disc	1
3	Seat	1
4	Upper Stem	1
5	Lower Stem	1
6	O-ring	3
7	Retainer Pin	2

Weco Model 22L Butterfly Valves

Model 22L

Long neck, lug body; 2- through 24-inch sizes

Recommended service and special features
General on/off and throttling services from 1 mm absolute vacuum to 175 psi (12 bar) cold working pressure at temperatures from -40 °F to 300 °F, depending on seat material; T apped lugs allow independent upstream or downstream bolting to 125 lb or 150 lb ANSI flanges; Neck allows for 3-inches pipe insulation. Special materials are available to meet 285 PSIG-consult factory for details.

Dimensions

Dim.	Valve Size, in.													
	2	2½	3	4	5	6	8	10	12	14	16	18	20	24
A	7 9/32	7 13/32	8 5/16	9 9/32	9 23/32	10 9/32	11 19/32	12 23/32	14 15/32	14 31/32	17 5/16	18 5/16	19 5/16	23 3/4
B	3	3 1/32	3 3/8	4 1/4	4 13/16	5 5/16	7	8 1/4	9 1/4	10 1/8	11 13/16	12 13/16	13 13/16	17 1/8
C	6	7	7½	9	10	11	13½	16	19	20 1/4	23 1/4	25	27 1/4	32
D	2 1/16	2½	3 1/16	4 1/16	5 1/16	6 1/16	8 1/16	10	12	13 1/4	15 9/32	17 9/32	19 1/4	23
E	⅛ Sq.	⅛ Sq.	⅛ Sq.	⅛ Sq.	⅛ Sq.	⅛ Sq.	⅛ Sq.	⅛ Sq.	1⅛ Sq.	1⅛ Sq.	2.0 Dia. ½ Keyway	2.0 Dia. ½ Keyway	2.0 Dia. ½ Keyway	2½ Dia. ⅛ Keyway
F	4	4	4	4	4	4	6	6	6	6	8	8	8	8
G	1 9/32	1 9/32	1 9/32	1 9/32	1 9/32	1 9/32	1 9/32	1 9/32	1 9/32	1 9/32	3 1/16	3 1/16	3 1/16	4 1/8
H	1 1/8	1 1/4	1 1/4	2	2 1/8	2 1/8	2½	2½	3	3	4	4½	5	6 1/16
I	3/16	3/16	3/16	3/16	3/16	3/16	9/16	9/16	9/16	9/16	13/32	13/32	13/32	21/32
J	3¼	3¼	3¼	3¼	3¼	3¼	5	5	5	5	6½	6½	6½	6½
K	⅛-11	⅛-11	⅛-11	⅛-11	¼-10	¼-10	¼-10	⅜-9	⅜-9	1-8	1-8	1⅛-7	1⅛-7	1¼-7
L	4	4	4	8	8	8	8	12	12	12	16	16	20	20
M	4¼	5½	6	7½	8½	9½	11¾	14¼	17	18¾	21¼	22¾	25	29½

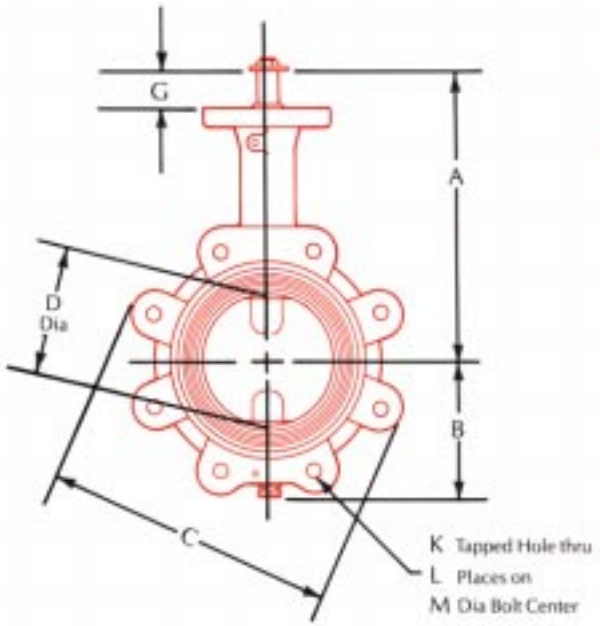

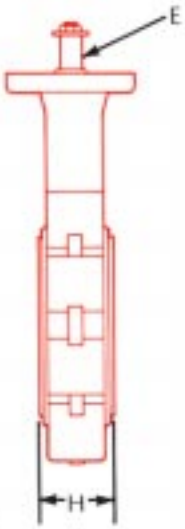

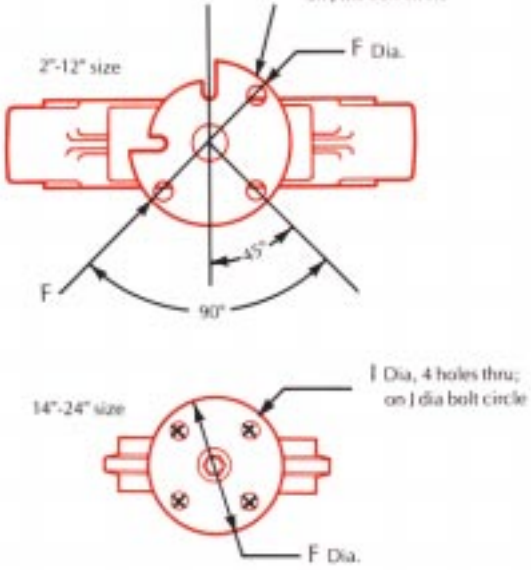

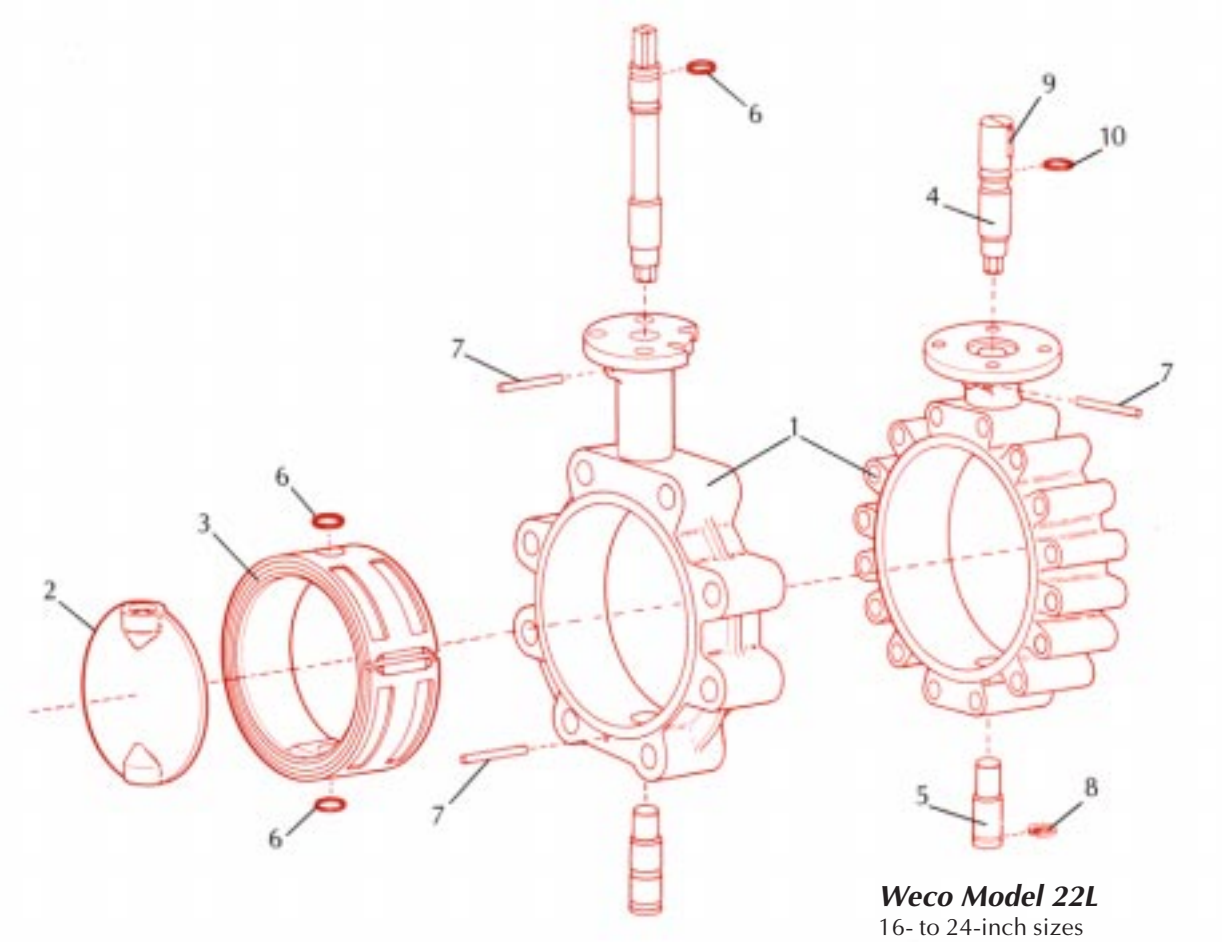

Weco Model 22L
16- to 24-inch sizes

Weco Model 22L
2- to 14-inch sizes

Materials of Construction

Valve Part	Standard Material	Optional[1] Material
Seat and O-ring	Nitrile (Buna N) (-20°F to 200°F)	Food grade nitrile Carboxylated nitrile Hypalon TFE Neoprene (standard or food grade) EPDM (Epoxy backed to 400°F) Fluorocarbon (Epoxy backed to 400°F)
Body	Ductile iron	Steel Aluminum
Stem (upper and lower)	416 stainless steel	316 stainless steel
Disc	Ductile iron Aluminum bronze	316 stainless steel, TFE encapsulated, 17-4PH Halar coated ductile iron

NOTES: 1. Other materials available; consult factory.
Halar is a registered trademark of Ausimont.
Hypalon is a registered trademark of DuPont.

Butterfly Valve Components

Ref. No.	Component Description	Number Required (Notes)
1	Body	1
2	Disc	1
3	Seat	1
4	Upper Stem	1
5	Lower Stem	1
6	O-ring	3[1]
7	Retainer Pin	2[2]
8	Retainer Snap Ring	1[3]
9	Locking Key	1[3]
10	Upper Stem Seal	1[3]

NOTES: 1. 16- to 24-inch valves only use 2.
2. 16- to 24-inch valves onlyuse 1; 12- and 14-inch valve uses 4.
3. Applies to 16- to 24-inch valves only.

Weco Standard and Throttling Handles

Standard Handles

2- through 12-inch valve sizes

Recommended service and special features
On/off valve operation from 1 mm absolute vacuum to 175 psi cold working pressure; Positive-stop gripper with integral locking lug insures full-open or full-closed operation; Model 12 and 12N valves have a detent plate which bolts on the valve body in each of four quadrants; Model 22 and 22L valves have pre-notched top flange with on/off detent positions; Gear operator recommended for 8-inch size valves and above.

Throttling Handles

2- through 12-inch sizes

Recommended service and special features
Throttling applications from 1 mm absolute vacuum to 175 psi (12 bar) cold working pressure; Notched detent plate and positive-stop gripper with locking lug insures positive locking in any of 10 positions from full open to full closed; Detent plate bolts on the valve body in each of the four quadrants; Gear operator recommended for 8-inch size valves and above.

Dimensions

Dim.	Valve Size, in.							
	2	2½	3	4	6	8	10	12
A	2⅛	2⅛	2⅛	2½	2½	3	3	2¾
B	9½	9½	9½	10⅝	10⅝	15	15	19
C	2¼	2¼	2¼	2¼	2¼	4	4	4
D	1 7/16	1 7/16	1 7/16	1 11/16	1 11/16	1 11/16	1 11/16	1 11/16
E	4	4	4	4	4	6	6	6

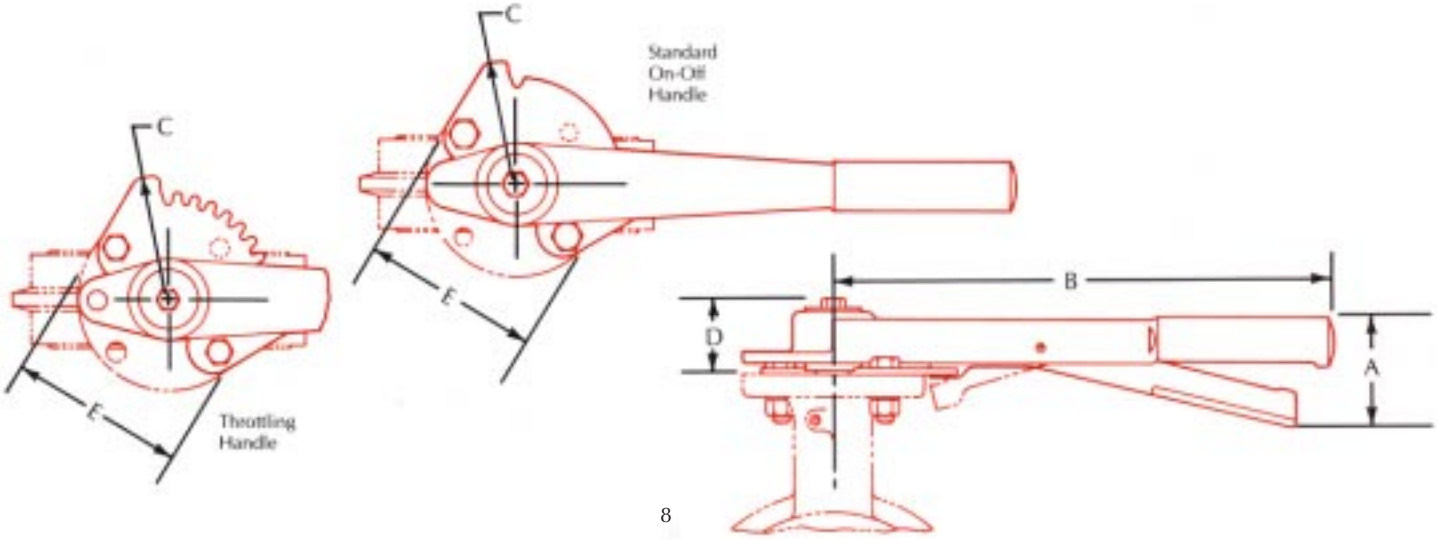

Gear Operators and Stem Extensions

Gear Operators

2- through 24-inch valve sizes

Recommended service and special features
Weatherproof, worm gear operator for manual on/off or throttling service; Operator has 90' travel ar c with internal travel stop screws for a plus or minus 20' adjustment at either end of the travel; Mounts on valve in any quadrant; Chain-wheel attachment available; Hand-wheel shaft extensions available.

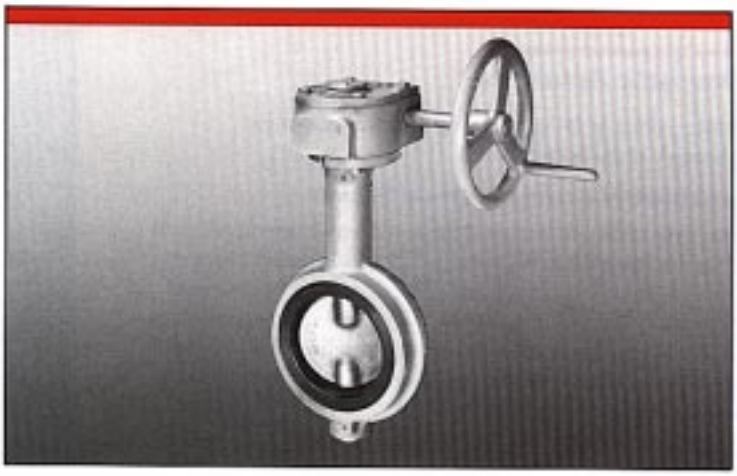

Dimensions

Dim.	2-6	8-10	12	14	16-20	24
A	2⅛	2½	2½	3	3⅛	5
B	1 1/16	1¼	1¼	1½	2⅛	2½
C	6½	10	10	14	14	14
D	5	7½	7½	15	15	15
E	4⅛	7	7	7¼	9⅝	11⅝
F	1⅝	2 9/16	2 9/16	3⅛	4½	4⅛
G	6 5/16	9⅝	11⅝	15¼	15¼	17⅛
H	3½	4⅛	4¼	5⅛	5¼	9½
I	3	3½	3½	3½	3½	3½
J	4	6¼	6¼	6½	9	10⅝

Gear Ratios: 2- to 6-inch sizes 20:1
8- to 12-inch sizes 30:1
14-inch size 50:1
16-inch to 24-inch sizes 60:1

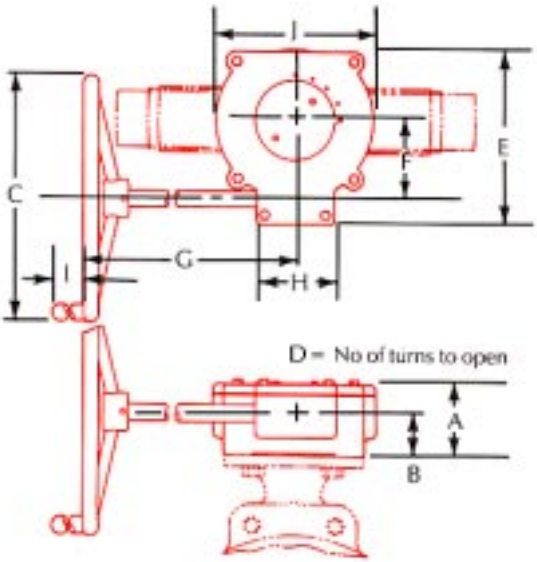

Stem Extensions

2- through 24-inch valve sizes

Recommended service and special features
Extends valve operating shaft, allowing service in applications where the valve is inaccessible; Extension is totally sealed for submersible or buried service; Actuator mounting dimensions are identical to corresponding valve.

Dimensions

Dim.	Valve Size, in.											
	2	2½	3	4	5	6	8	10	12	14	16-20	24
A	To Be Specified by Customer											
B	⅛	⅛	⅛	⅛	⅛	⅛	3/16	3/16	3/16	3/16	½	½
C	1½	1½	1½	1½	1½	1½	2 5/16	2 5/16	2 5/16	—	—	—
D	1	1	1	1¼	1¼	1¼	1¼	1¼	1¼	1¼	3 1/32	4⅛
E	⅛ sq	⅛ sq	⅛ sq	⅛ sq	⅛ sq	⅛ sq	⅛ sq	⅛ sq	1/16 sq	1/16 sq	2.00 Dia ½ Keyway	2.50 Dia ⅛ Keyway
F	4	4	4	4	4	4	6	6	6	6	8	8
G	3/16	3/16	3/16	3/16	3/16	3/16	3/16	3/16	3/16	3/16	13/32	21/32
H	3¼	3¼	3¼	3¼	3¼	3¼	5	5	5	5	6½	6½
I	1/16	1/16	1/16	1/16	1/16	1/16	3/32	3/32	3/32	—	—	—
J	⅛	⅛	⅛	⅛	⅛	⅛	3/16	3/16	3/16	—	—	—

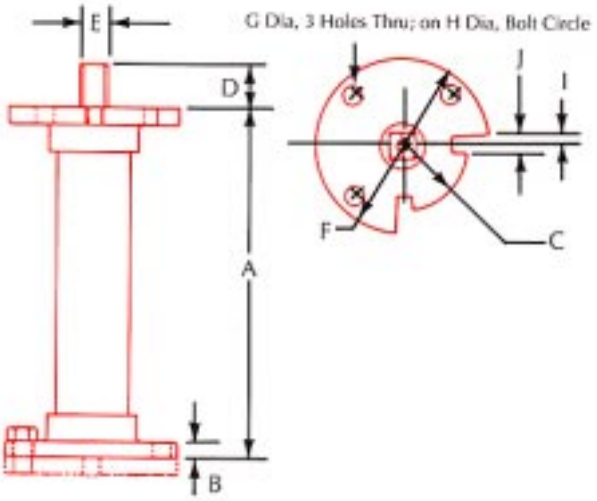

NOTES: *Minimum Standard Length is 4"
Maximum Standard Length is 96" (For longer length extensions, consult factory.)

Weco Pneumatic Actuators

Pneumatic Actuators

Double-acting or fail-safe spring return actuator for
2- through 12-inch valve sizes

Recommended service and special features
Patented pneumatic actuator for on/off valve operation; Full 90° operation with a minimum of 30 psi air , no adjustments required; T otally enclosed and sealed actuator has integral disc position indicator and manual override; Exclusive involute drive provides constant tor que throughout full 90 ° travel, eliminates shaft side loads, and allows for precise disc positioning; Mounts directly to W eco butterfly valves without special adapters or mounting hardware.

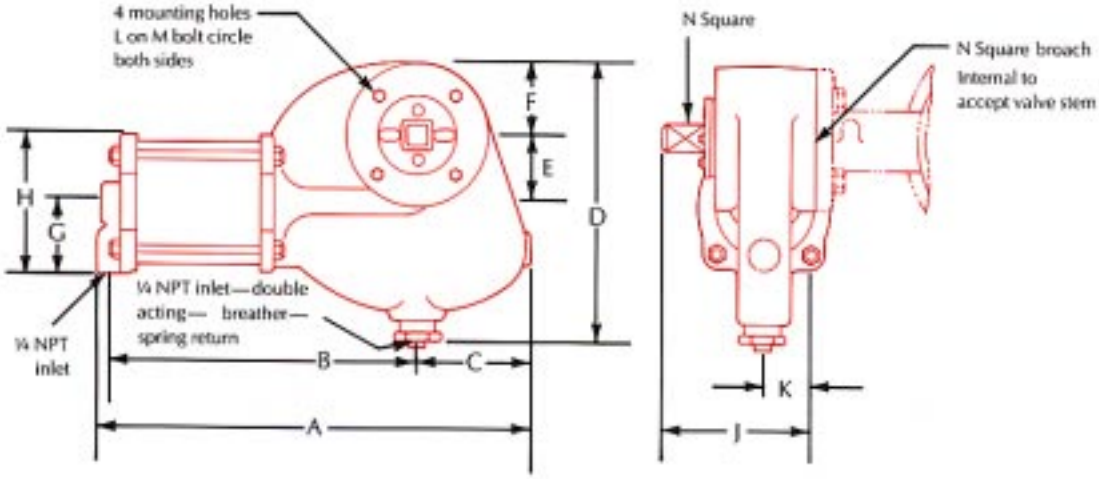

Dimensions

Double acting models															
Model	Valve Sizes, in.	Weight (Lbs.)	A	B	C	D	E	F	G	H	J	K	L	M	N
330	2-6	8½	12 9/16	8¼	3 9/16	7 11/16	1 15/16	2 1/16	2	3⅞	4 9/16	1 7/16	⅜-16 UNC	3¼	⅝
350	5-6	18	16⅛	12 9/16	3 9/16	7 11/16	1 15/16	2 1/16	3 9/16	6½	4 9/16	1 7/16	⅜-16 UNC	3¼	⅝
550	8-10	35	19⅛	13 15/16	5 9/16	12 9/16	3 1/16	3 1/16	3 9/16	6½	5 9/16	1⅞	½-13 UNC	5	⅞
550A	12	35	19⅛	13 15/16	5 9/16	12 9/16	3 1/16	3 1/16	3 9/16	6½	5 9/16	1⅞	½-13 UNC	5	1⅛
590	10	55	22	15⅞	5 9/16	12 9/16	3 1/16	3 1/16	5 9/16	10 11/16	5 9/16	1⅞	½-13 UNC	5	⅞
590A	12	55	22	15⅞	5 9/16	12 9/16	3 1/16	3 1/16	5 9/16	10 11/16	5 9/16	1⅞	½-13 UNC	5	1⅛

Spring return models															
Model	Valve Sizes, in.	Weight (Lbs.)	A	B	C	D	E	F	G	H	J	K	L	M	N
332	2-2½	13	19 11/16	15⅛	3 9/16	8⅛	1 15/16	2 1/16	2	3⅞	4 9/16	1 7/16	⅜-16 UNC	3¼	⅝
333	3-4	15	19 11/16	15⅛	3 9/16	8⅛	1 15/16	2 1/16	2	3⅞	4 9/16	1 7/16	⅜-16 UNC	3¼	⅝
354	3-4	25	20¼	16 7/16	3 9/16	8⅛	1 15/16	2 1/16	3 9/16	6½	4 9/16	1 7/16	⅜-16 UNC	3¼	⅝
355	5-6	31	20¼	16 7/16	3 9/16	8⅛	1 15/16	2 1/16	3 9/16	6½	4 9/16	1 7/16	⅜-16 UNC	3¼	⅝
596	8-10	93	30⅛	24	5 9/16	13⅛	3 9/16	3 1/16	5 9/16	10 11/16	5 9/16	1⅞	½-13 UNC	5	⅞
597A	12	106	30⅛	24	5 9/16	13⅛	3 9/16	3 1/16	5 9/16	10 11/16	5 9/16	1⅞	½-13 UNC	5	1⅛

Weco Vane and Other Actuators

Vane Actuators

Quarter -turn, double-acting actuator for 2- through 6-inch valve sizes

Recommended service and special features
Compact pneumatic actuator for on/off valve operation; Actuator mounts directly to W eco butterfly valves in any quadrant; The only moving part, the vane, is cast integral to the shaft for sturdiness; No field lubrication required; Fully repairable on-line.

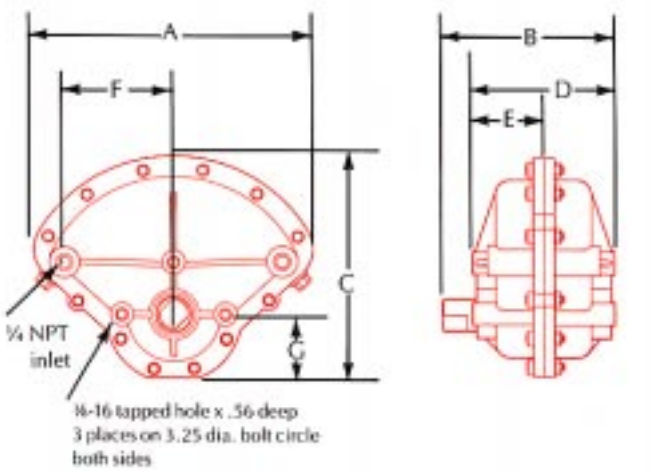

Dimensions

A	B	C	D	E	F	G
8.66	5.56	7.00	4.62	2.31	3.41	2.00

Other Actuators

Air Cylinder
Totally enclosed and sealed pneumatic actuator for on/off or throttling applications on 2- through 24-inch valve sizes; 2- to 5-inch and 12- to 24-inch sizes require 60 psi air , 6- to 10-inch sizes require 80 psi air; Mounts to W eco valve top flange using adapter; Internal adjustable stops, disc position indicator and manual override are standard.

Electric
Weco 2- through 24-inch valves may be equipped with electric actuators for on/off, throttling and automated services. Mounting brackets are required.

Tee Linkages
Tee linkages are available for operation of two valves simultaneously with one actuator for dividing or mixing flow through a tee. Can be used with on-off or throttling actuators.

Other Actuators
Weco butterfly valves can be equipped with other types of actuators. For a quote on other actuators, consult the factory .

Weco Butterfly Valves Sizing Information

Non-Compressible Fluids

Use the following equations for sizing valves handling liquids

(A) $C_v = Q\sqrt{\frac{G}{\Delta P}}$

(B) $Q = C_v\sqrt{\frac{\Delta P}{G}}$

(C) $\Delta P = \left[\frac{Q}{C_v}\right]^2 G$

Where: Q = Flow in gallons per minute (gpm)
ΔP = $(P_1 - P_2)$ Pressure Drop (psi)
P_1 = Inlet Pressure (psia)
P_2 = Outlet Pressure (psia)
G = Specific Gravity of Liquid (Water = 1.0)
C_v = Valve Coefficient (Refer to Appropriate Table)

The equations listed above are the basis for the WECO sizing nomogram. The nomogram is a method of solving the equations above quickly and simply when the service fluid is water.

Example

Given: A 6" WECO Butterfly Valve is to be installed in a line handling 500 gpm of water.

Find: Maximum pressure drop across the valve when in the full open and 60° open positions.

Solution: This problem may be solved using the nomogram or equation (C).

First Using the Nomogram: Enter nomogram on right side for a flow rate of 500 gpm. Draw horizontal line until it intersects the 6" valve line. From this point draw a vertical line until it intersects the 90° open line. Project line horizontally to the left and read ΔP of .061 psi. Now, using same procedure as above, extend vertical line to 60° open line and project horizontally to the left to read ΔP of .67 psi for 60° open.

Using Equation (C): Pressure Drop = $\Delta P = \left[\frac{Q}{C_v}\right]^2 G$

Where: C_v = 2020 @ 90° open (from tables)
G = 1.0 (Water)
Q = 500 gpm

$$\Delta P = 1.0\left[\frac{500}{2020}\right]^2 = .0613$$

Now: C_v = 610 gpm @ 60° open, and $\Delta P = 1.0\left[\frac{500}{610}\right]^2 = .672$

C_v Values
Resilient Seated BFV'S — All Models

	GPM @ PSI @ Various Disc Angles								
Valve Size, in.	10°	20°	30°	40°	50°	60°	70°	80°	90°
2	1.59	6.17	14.2	26.3	44.5	70.6	105	135	159
2½	2.33	9.06	20.9	38.6	65.3	104	156	215	266
3	3.50	13.6	31.4	57.9	98.0	156	240	342	457
4	6.16	23.9	55.1	102	173	274	423	625	860
5	9.56	37.2	85.6	158	268	426	656	970	1,320
6	13.7	53.3	123	227	384	610	941	1,420	2,020
8	24.2	94.3	217	401	679	1,080	1,660	2,500	3,540
10	37.3	145	334	617	1,040	1,660	2,560	3,830	5,580
12	53.7	209	481	888	1,500	2,390	3,690	5,620	8,080
14	61	166	650	1,300	2,100	3,500	5,220	8,000	13,000
16	81	477	960	1,700	2,900	4,920	7,000	11,000	17,000
18	125	535	1,120	1,960	3,500	5,800	8,000	15,000	19,000
20	161	723	1,500	2,700	4,800	7,900	12,500	18,500	27,000
24	305	921	2,000	3,640	6,175	10,350	17,500	24,000	35,000

Nomogram for Sizing Weco Butterfly Valves

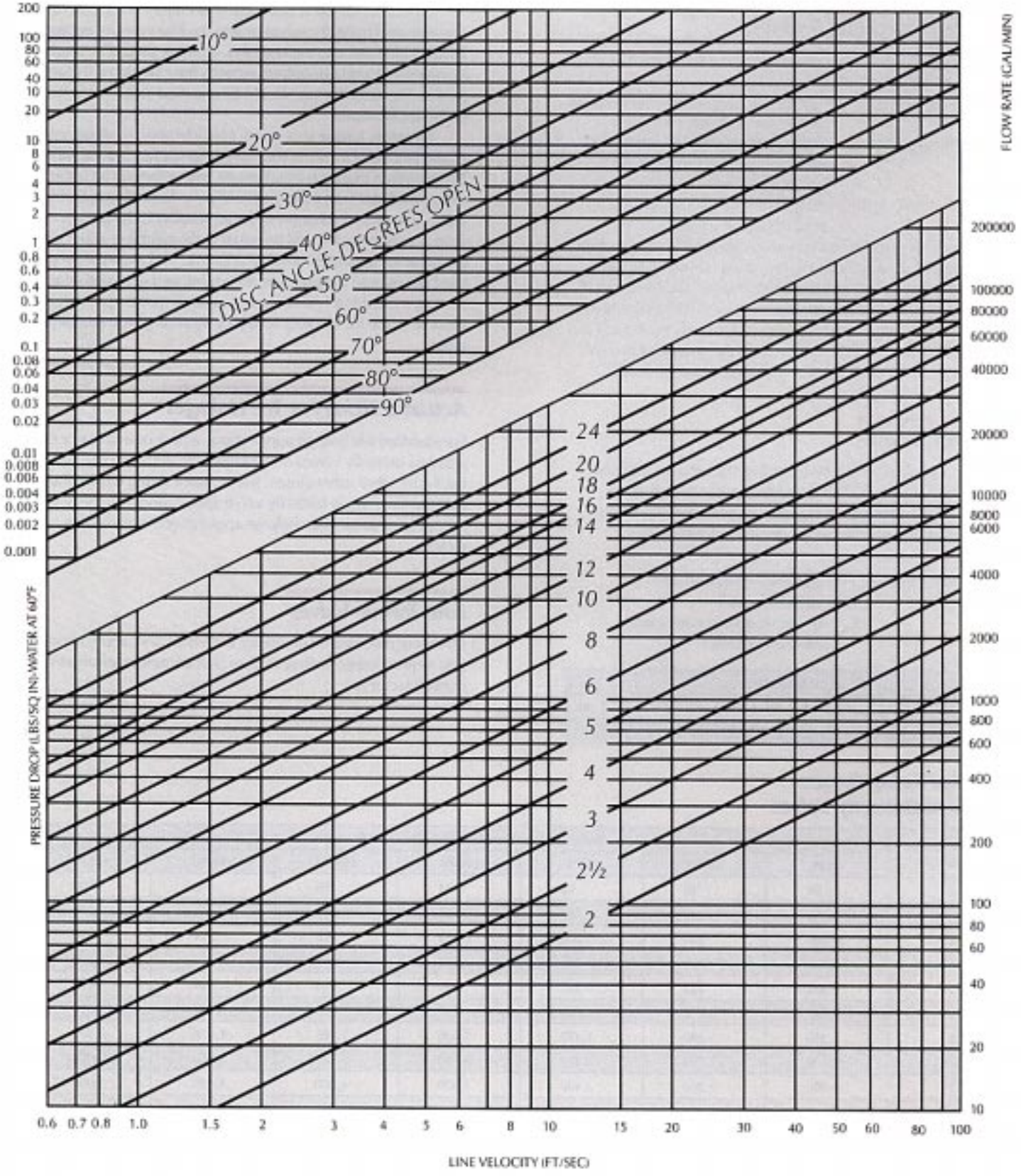

Actuator Sizing Information

Required Operating Torques:

There are three tor ques to be considered when selecting the proper actuator for a butterfly valve.

(1) Seating Torque - The tor que required to displace a resilient seat and effect shutoff

(2) Bearing Torque - The tor que required to over come friction for ces on the valve shaft bearing surfaces

(3) Dynamic Torque - Torque due to fluid for ces which tend to close the valve.

The tor ques for resilient seated valves tabulated in this section are the sum of (1) and (2) above for various shutoff pressures. These tabulated values include a safety factor lar ge enough to insure proper valve operation in most general butterfly valve applications. Where unusual service conditions exist (such as likelihood of seat swelling, or low and high temperature seat hardening), an additional safety factor may be applicable.

Dynamic Torque

Dynamic tor que is tor que on the valve shaft due to the fluid for ces on the valve disc. This tor que is a function of valve diameter, pressure drop, and a tor que coefficient (C_t) which varies with angle opening. T orque is calculated by the equation:

$T = C_t D^3 \Delta P$ Where: T = Dynamic tor que (in-lb)

D = Valve Dia. (in.)

C_t = Dynamic tor que coefficient (see table below)

C_t vs. Angle Open										
Angle Open	0	10	20	30	40	50	60	70	80	90
C_t	0	.007	.014	.022	.033	.050	.087	.143	.215	0

Dynamic tor que is not usually of major concern in resilient seated butterfly valves unless the line velocity exceeds 20 fps. If line velocity exceeds this, a check should be made to insure that actuator output exceeds the calculated dynamic tor que. Dynamic tor que should be checked at 80 ° open for on-off applications.

Dynamic tor que is of prime consideration in situations where line velocity is not recovered downstream of the valve. This situation exists on installations where there is an unlimited sour ce and less than 6 diameters of pipe downstream of the valve. If a valve dischar ges to the atmosphere, the pressure drop across the valve will be equal to the height of water above the valve for all angles of valve opening. This pressure drop must not exceed the pressure drop tabulated in Maximum ΔP vs. Angle Opening T ables for any angle. If it does, provisions must be made for velocity recovery by adding downstream piping.

Actuator Sizing For Tee Linkages

For standard tee linkage applications where one actuator operates two butterfly valves of the same size with one valve opening as the other valve closes, the actuator sizing will be the same as for a single butterfly valve application. For the actuator sizing for other tandem linkage applications, consult the factory .

Low-Torque Valves

Under cut discs are available for butterfly valve applications that require lower seating tor ques. For complete information, consult factory .

Actuator Sizing Torque For Weco Butterfly Valves

Valve Size	Seating Torques In In-Lbs., @ Various Line Pressures						
	0 PSI	50 PSI	75 PSI	100 PSI	125 PSI	150 PSI	175 PSI
2	90	90	92	94	96	98	100
2½	130	130	134	138	142	146	150
3	200	200	206	212	218	224	230
4	350	350	366	382	398	414	430
5	535	535	566	597	628	659	690
6	770	770	823	876	929	982	1,035
8	1,350	1,350	1,475	1,600	1,725	1,850	1,975
10	2,100	2,100	2,340	2,580	2,820	3,060	3,300
12	3,000	3,000	3,400	3,800	4,200	4,600	5,000
14	3,680	4,240	4,790	5,350	5,900	6,480	
16	4,880	5,730	6,580	7,430	8,280	9,140	
18	6,230	7,460	8,690	9,920	11,150	12,390	
20	7,770	9,380	11,000	12,610	14,230	15,840	
24	11,100	14,010	16,920	19,830	22,740	25,650	

NOTE: For valves using teflon seats, use torque value at highest standard valve rating even for lower pressure applications.
Above figures are for valves used in wet service, for dry service valves contact factory.

Minimum air pressure for Weco pneumatic actuators operating Weco valves at 175 psi rated pressure

Double acting models	Actuator air pressure (psi)		
	30	50	75
	Valve sizes		
330	2"-4"	2"-5"	2"-6"
350	2"-6"	2"-6"	2"-6"
550	8"	8"-10"	8"-10"
550A	—	—	12"
590	8"-10"	8"-10"	8"-10"
590A	12"	12"	12"

Spring return models	Actuator air pressure (psi) (Note 1)			
	30 / 40	40 / 50	60 / 70	70 / 80
	Valve sizes			
332	2"-2½"	2"-2½"	2"-2½"	2"-2½"
333	—	—	—	2"-4"
354	2"-4"	2"-4"	2"-4"	2"-4"
355	—	—	2"-6"	2"-6"
596	—	8"-10"	8"-10"	8"-10"
597A	—	—	12"	12"

NOTES

1. Pressures above line for air to open, spring to close. Below line for air to close, spring to open.
2. All of the above ratings are conservative for normal installations. Abnormally high torque conditions may necessitate increased actuator capability.
3. Maximum actuator air pressure 120 psi, except 80 psi maximum pressure on Models 350, 590 and 590A.

Weco pneumatic actuator torque ratings (note air pressures)

Double acting models	Displacement (cu. in.)	Rated torque (in. lbs.)	Pressure (psi) to achieve rated torque
330	25	1,150	80
350	72	1,150	30
550	120	5,500	80
550A	120	5,500	80
590	355	5,500	30
590A	355	5,500	30

Spring return models	Displacement (cu. in.)	Spring closing torque (in. lbs.)	Spring opening torque (in. lbs.)	Air opening torque @ 80 psi (in. lbs.)	Air closing torque @ 80 psi (in. lbs.)
332	25	150	300	1,000	850
333	25	425	850	725	300
354	72	425	850	2,641	2,216
355	72	1,050	2,100	2,016	966
596	355	3,300	6,600	11,366	8,066
597A	355	5,000	10,000	9,666	4,666

NOTE: All of the above ratings are for normal installations. Abnormally high torque conditions may necessitate increased actuator air pressure.

Weco Model 200 Vane-Type Pneumatic Actuator

Operating Conditions

Maximum Operating Pressure	120 psi
Maximum Housing Pressure	180 psi
Displacement	41 cu. in./90° Stroke

Torque Data

Pressure (psi)	40	60	80	100	120
Torque Output (in lbs)	800	1,200	1,600	2,000	2,400

Minimum Actuator Pressure for Weco Valves at 175 psi line pressure

Valve Size	2"-4"	5"	6"
Pressure (psi)	30	45	60

NOTE: All of the above ratings are for normal installations. Abnormally high torque conditions may necessitate increased actuator air pressure.

Ordering Information

Weco butterfly valves are available from stock in a variety of models, sizes, pressures, and materials. V alve bodies, discs, stems, and seats all can be individually matched to your specific operating conditions, including: temperature range, type and concentration of fluid, areation, and various flow conditions. All FMC materials of construction meet ASTM and AN standards. (For a complete listing of material recommendations for handling over 375 different products, refer to the W eco Butterfly V alve Material Selection Guide.)

To insure that you get the right W eco valve for your application, it is necessary to include the following information when placing an order:

1. Weco model number
2. Valve size in inches
3. Materials of construction
4. Product being handled (if acid, give concentration)
5. Cold working pressure and maximum pressure
6. Operating temperature, including minimum and maximum temperature
7. Type of handle, operator , or actuator

NOTES:

Order Terms and Conditions

1. Payments are to be made in U.S. funds unless otherwise specified; Payment terms: Net 30 days. Prices invoiced will be those in effect at time of shipment. All prices apply F.O.B. point of manufacture. Seller reserves the right to place a service char ge on past due accounts at the highest rate permitted by law .

2. A. Seller warrants products of its manufacture for a period of one (1) year from date of shipment, to the extent that Seller will at its option repair or replace, F.O.B. point of manufacture, any such products if by reason of faulty material or workmanship they prove defective under normal use and service; provided, however , that Seller does not in any manner whatsoever warrant seals or packing materials in equipment handling special or corrosive fluids or operating at unusual temperatures or pressures. Except to the extent of the descriptions contained hereon, or as specified on Seller's Order Acknowledgement. Seller makes NO WARRANTY OF MERCHANTABILITY OR FITNESS FOR A PARTICULAR PURPOSE, NOR ANY OTHER WARRANTY , EXPRESS OR IMPLIED.

B. If in Seller's opinion repair or replacement will not remedy a claimed product deficiency , or if a product of Seller 's manufacture does not comply with the description or specification set forth on Seller's Order Acknowledgment, Seller 's liability shall be limited to repayment of any amounts paid on the pur chase price, cancellation of the order and acceptance of the product F .O.B. point of manufacture, however , if the product has been in use for a period in excess of 30 days, Seller reserves the right to make a reasonable depreciation char ge for such use.

C. Products not of Seller 's manufacture and special plating, coatings, or heat treatment applied to Seller's products are guaranteed only to the extent of guarantees provided by suppliers of such products, platings, coatings, or treatments.

D. Seller does not recommend and will not assume any responsibility for rebuilding, repairing special plating, coating, welding, or heat treating done outside Seller 's plant by or at the request of the Buyer .

E. Seller expressly disclaims consequential damages arising in connection with the installation, use, operation, repair , replacement or service of any products furnished, or from any breach of the foregoing warranty.

3. THE SELLER SHALL NOT IN ANY EVENT BE LIABLE FOR CONSEQUENTIAL DAMAGES ARISING OUT OF OR IN CONNECTION WITH THIS AGREEMENT, INCLUDING WITHOUT LIMITATION BREACH OF ANY OBLIGATION IMPOSED ON THE SELLER UNDER OR IN CONNECTION WITH THIS AGREEMENT. CONSEQUENTIAL DAMAGES FOR PURPOSES OF THIS AGREEMENT SHALL INCLUDE WITHOUT LIMITATION LOSS OF USE, INCOME OR PROFIT, OR LOSSES SUSTAINED AS THE RESULT OF INJURY (INCLUDING DEATH) TO ANY PERSON, OR LOSS OF OR DAMAGE TO PROPERTY (INCLUDING WITHOUT LIMITATION PROPERTY HANDLED OR PROCESSED BY THE USE OF THE PRODUCT).

4. Seller shall not be liable to Buyer for any loss or damage suffered by the Buyer , directly or indirectly, as a result of Seller 's failure to perform, or delay in performing, any obligation hereunder , where such failure or delay is caused by fires, floods, labor troubles (including, without limitation, strikes, slowdowns and lockouts), war , civil disturbances, Government regulations, interruptions of or delay in transportation, material shortages, power failures, accidents, acts of God, or other causes of like or different character beyond Seller 's control.

5. All published dimensions, weight, temperature and pressure ratings are approximate. if critical, consult factory.

6. The risk of loss or destruction of, or damages to, the product shall be on the Buyer from and after delivery of the product to the Buyer or carrier , whichever first occurs.

7. Buyer shall pay the amount of any Federal, State, County , or Municipal sales, use, compensating, intangibles, gross income or like tax applicable to this transaction which is now in effect or may hereafter become effective, but not including taxes payable upon Seller 's net income.

8. No material will be accepted for credit when returned without written permission from Seller 's home office. All material accepted for credit is subject to Seller 's normal restocking char ge. No material will be accepted for credit after one year from date of shipment.

9. Products incorporating variations from catalog items are considered special and are not subject to cancellation without charge. Specials may be shipped 10% over or under quantities ordered and may not be returned for credit.

10. The purchase of the product does not entitle the Buyer to employ the same with any patented process owned by the Seller or others, except where the Buyer is expressly authorized to use such process.

11. A. Except in the case of articles, materials and designs furnished or specified by the Buyer , the Seller, at his own expense shall defend any suit brought against the Buyer on the ground that the use of the product for the intended purpose or purposes, as furnished by the Seller , infringes any United States patent in effect on the pur chase date, and shall pay the amount of any judgement that may be awarded against the Buyer in any such suit, provided and upon condition that the Buyer shall have made all payment due under this Agreement and shall (a) promptly deliver to the Seller all infringement notices and other papers received by or served upon the Buyer , (b) permit the Seller to take complete char ge of the defense of such suit and compromise the same, if deemed advisable by the Seller, and (c) assist in every reasonable way in the conduct of such defense.

B. In the event that the Buyer shall be enjoined by a court of competent jurisdiction, from which no appeal can be taken, from selling or using the product for the intended purpose or purposes on the ground that such sale or use of the product infringes any such United States patent, or if it is established to the Seller 's satisfaction, upon due investigation, that sale or use of the product infringes any such United States patent, the Seller , at its option, may either (a) procure for the Buyer a license to sell and/or use the product; (b) modify the product so as to make it noninfringing without seriously impairing its performance; (c) replace the product with a product that is substantially equal but noninfringing; or (d) accept the return of the product from the Buyer , in which event the Seller shall refund to the Buyer the pur chase price less depreciation at the rate of 15 per cent per year (measured from the date Seller shipped the product). The foregoing sets forth the Seller 's entire liability to the Buyer for patent infringement based on the possession, use or sale of the product by the Buyer; it being understood and agreed that the aforesaid obligations of the Seller do not extend to, and are not applicable in the case of, any patent infringement claims directed to a method or a process.

C. The Buyer agrees to defend and indemnify the Seller against any claims or liabilities for, or by reason of, any alleged patent infringement arising from the manufacture or sale of all or any part of the product which is manufactured in accordance with the specifications furnished by the Buyer .

12. Title to the products supplied hereunder this order, and to any and all additions and accessories thereto and substitutions therefore, shall remain with Seller as a security interest until Buyer has completed payment of the pur chase price, plus accrued interest, if any .

13. It is understood that Seller has relied upon data furnished by and on behalf of Buyer with respect to the safety aspects of the products supplied hereunder and/or representations by or on behalf of Buyer that such products will not be applied or used by Buyer or its customers in such a way as to detract materially from their safety in use, including, without limitation, in the manufacture of a product of which such products will be a part, and that it is Buyer 's responsibility to assure that such products, when installed and put in use, will be in compliance with safety requirements fixed by applicable law and will be otherwise legally adequate to safeguard against injuries to persons or property.
BUYER HEREBY AGREES TO INDEMNIFY, HOLD HARMLESS AND DEFEND SELLER, AND ITS DIRECTORS, OFFICERS, EMPLOYEES AND AGENTS AGAINST ANY AND ALL LOSSES, COST , DAMAGES, CLAIMS, LIABILITIES OR EXPENSES, INCLUDING, BUT NOT LIMITED TO, REASONABLE ATTORNEY'S FEES, ARISING OUT OF ANY INJURY TO ANY PERSON OR DAMAGE TO ANY PROPERTY CAUSED BY THE INADEQUACY IN THE PRODUCTS SUPPLIED HEREUNDER OF THE SAFETY FEATURES, DEVICES OR CHARACTERISTICS SPECIFIED HEREIN, OR IN THE INSTALLATION, USE OR OPERATION OF SUCH PRODUCTS, EXCEPT CLAIMS SOLELY FOR REPAIR OR REPLACEMENT OF DEFECTIVE PARTS COVERED BY THE WARRANTY SET FORTH IN PARAGRAPH 3 HEREOF.

14. No effect shall be given to any provision in any acceptance or pur chase form of the Buyer which is in conflict with or in addition to the terms hereof.

15. Should any part or provision of this quotation be held unenfor ceable or in conflict with the law of any jurisdiction, the validity of the remaining parts or provisions shall not be affected by such holding.

FMC Corporation
Fluid Control Division

Fluid Control Headquarters
FMC Fluid Control
6677 North Gessner Road
Houston, TX 77040
Phone: 713/510-6800
Fax: 713/510-6803

Manufacturing Facility
FMC Fluid Control
2825 West Washington
P.O. Box 1377
Stephenville, TX 76401
Toll Free: 800/772-8582 (U.S.)
Phone: 254/968-2181
Fax: 254/968-5709

Eastern
FMC Fluid Control
130 St. Nazaire Road
Broussard, LA 70518
P.O. Box 3091
Lafayette, LA 70505
Phone: 318/837-9263
Fax: 318/837-5844

Western
FMC Fluid Control
1675 Broadway, Suite 1800
Denver, CO 80202
Phone: 303/623-4622
Fax: 303/623-7347

Alaska
FMC Fluid Control
700 International Airport Rd
Building A-1
Anchorage, AK 99518
Phone: 907/563-3990
Fax: 907/563-5810

West Texas
FMC Fluid Control
3500 West County Road North
Odessa, TX 79764
Phone: 915/550-2084
FAX: 915/366-8538

Scotland
FMC Corporation (U.K.) Ltd.
Fluid Control
Wellington Road Industrial Park
Wellington Circle
Aberdeen AB12 3JG, Scotland
Phone: 011+44+1224/898-555
Fax: 011+44+1224/249-460

Singapore
FMC South East Asia Pte. Ltd.
149 Gul Circle
Singapore 629605
Phone: 011+65/862-3659
Fax: 011+65/861-8251

United Arab Emirates
FMC International S.A.
Al Moosa Tower, 17th Floor
Box 3228
Dubai, United Arab Emirates
Phone: 011+971+4/310-948
Fax: 011+971+4/310-950

The Netherlands
FMC Fluid Control (Nederland) B.V.
Europalaan 16
Box 757
2400 AT, Alphen a/d Rijn
The Netherlands
Phone: 011+31+172/470-024
Fax: 011+31+172/470-026

France
FMC Europe S.A.
Z.I. Molina LaChazotte
810 Rue George Sand
42350 La Talaudiere, France
Phone: 011+33+4/7747-5015
Fax: 011+33+4/7747-5014

Mexico
FMC Equipo Petrolero S.A. de C.V.
Carretera a Buena Vista km. 2.8
Ranchería Miguel Hidalgo
Villahermosa, Tabasco, Mexico
Phone: 011+52+93/50-0123
Fax: 011+52+93/50-1661

Venezuela
FMC Fluid Control de Venezuela, S.A.
Avenida Intercomunal
Frente Carretera "L"
Los Morochas, Estado Zulia, Venezuela
Phone: 011+58+65/26901
Fax: 011+58+65/23406

FMC Services and Supplies Oriente, S.A.
Fluid Control Division
Sector San Vicente
Carretera Nacional Via Puerto La Cruz
Al lad de la E/S Guarapiche II
Maturin, Estado Monagas, Venezuela
Phone: 011+58+92/220003
Fax: 011+58+92/220178

©Copyright 1997, FMC Corporation
Printed in U.S.A., EW 5.0M 9-98