FMC Technologies

Smith Meter™ Provers

Bidirectional Sphere Type

Specifications

Issue/Rev. 0.1 (5/89)

Bulletin SS0V002

Smith Meter™ Bidirectional Provers *are stationary or portable displacement-type meter proving devices. When connected in series with a meter, the number of meter pulses generated during the round trip displacement of the prover-calibrated (water drawn) volume yields accurate meter factor.*

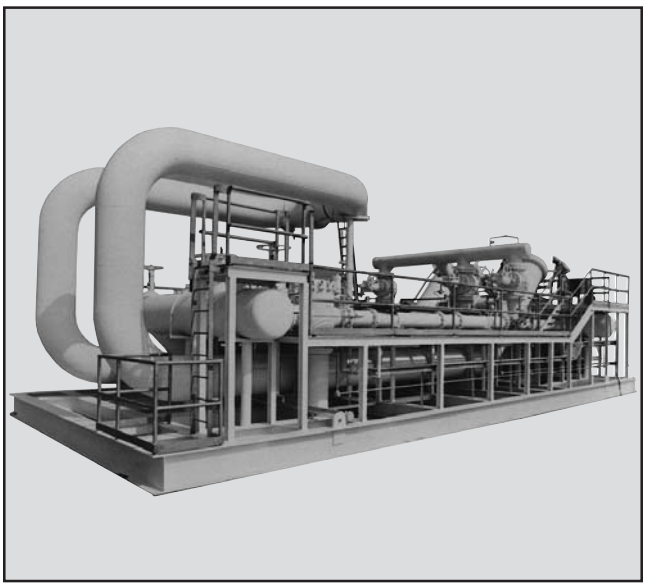

Features

- **Precisely Calibrated Volume** - Traceable to NIST (Formerly NBS).
- **Highly Compatible Materials of Construction** - For use on a wide range of products.
- **Bubble-tight Diverter Valve Sealing** - Two seals and monitoring device assure positive sealing under low differential pressure proving conditions.
- **Local or Remote Control** - Instrument duplications eliminated.

Principle of Operation

Flow passes through the meter, the diverter valve, and then down through the prover moving the spheroid out of the launch chamber. It then continues past the first detector switch, the calibrated section, the second detector switch, and eventually deposits the spheroid in the receiving launch chamber. The flow stream passes around the spheroid, out the diverter valve, and down the pipeline. When the spheroid passes the first detector switch, the meter prover counter (totalizer) is triggered to totalize meter pulses until the second detector switch is triggered. The number of pulses accumulated on the prover counter while the spheroid moves between detector switches is compared to the calibrated volume of the prover section to obtain meter factor.

The proving cycle of the bidirectional type prover is one round trip of the spheroid; equivalent to the sum of pulses accumulated on the prover counter as the spheroid travels in both directions between detector switches. The direction of travel of the spheroid is reversed by changing the direction of flow through the prover via the four-way diverter valve.

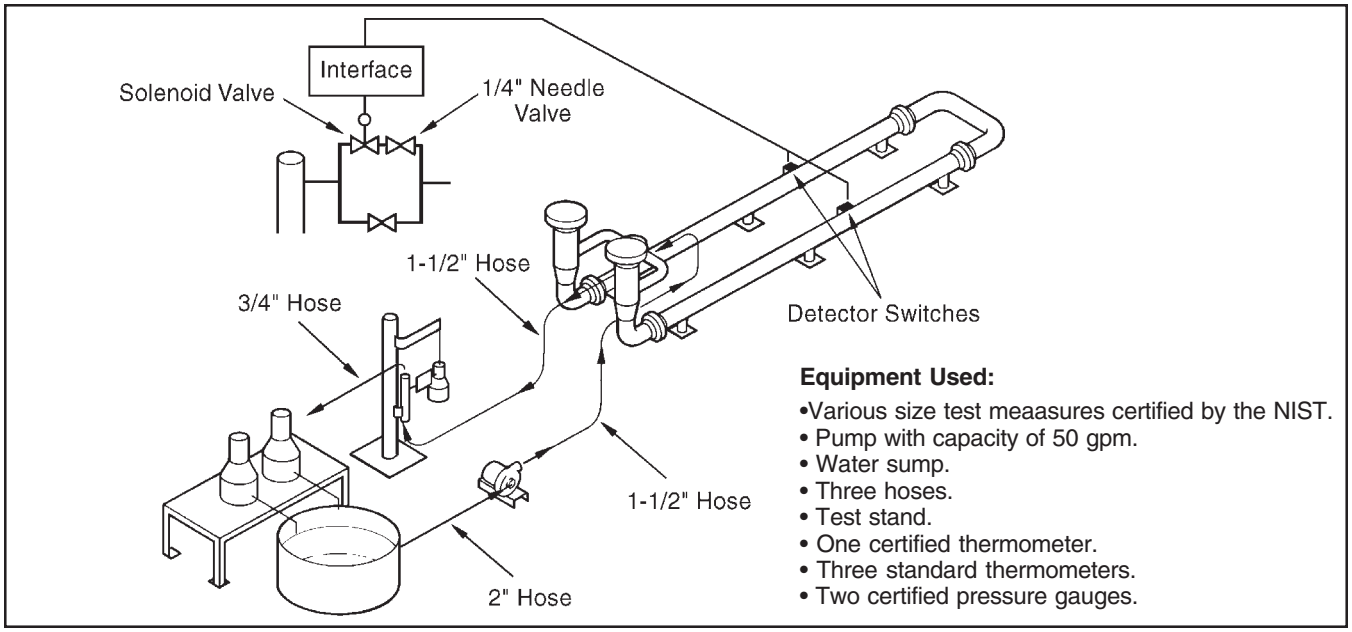

Water Draw System

Calibration

Prover calibration is accomplished using water draw equipment and procedures in accordance with the National Institute of Standards and Technology (NIST) measures certification and the API Manuals of Petroleum Measurement Standards, Chapters 4 and 12.

Prover volume accuracy is certified within 0.02% per the preceding standards.

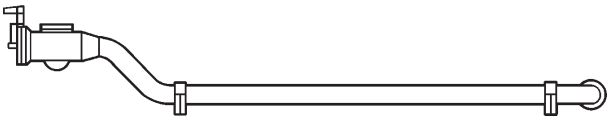

Designed for Underground Installation

Single-Loop Bidirectional Prover

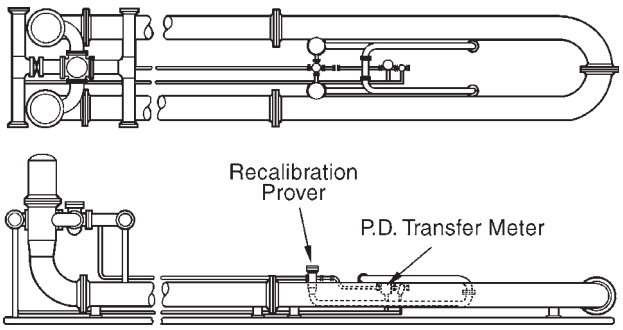

With recalibration unit utilizing Smith positive displacement meter and small scorpion design prover as transfer standard.

High-Capacity Bidirectional Prover

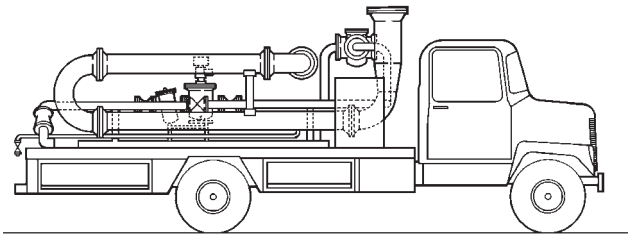

Scorpion design utilizing the Smith positive displacement transfer meter.

Portable Truck-Mounted Bidirectional Prover

Applications

The Smith Meter™ Bidirectional Prover may be used to calibrate positive displacement or turbine meters in virtually any application including loading rack installations, pipelines, barge loading/unloading systems, etc. These provers may be used on most liquid petroleum products such as LPG, gasolines, and crude oils which have varying viscosities and lubricating qualities. Typical installations are shown at the left.

Specifications

Connections

2" through 24", ANSI Class 150 through 900 flanged.

Maximum Working Pressure

To 2,220 psi (15,307 kPa) at 100°F (38°C).

Temperature Range

Standard: -20°F to 200°F (-31°C to 94°C).
Optional: Consult factory.

These Provers Meet The Following Standards

- ANSI B31.4 - Liquid Petroleum Transportation Piping Systems
- ANSI B31.3 - Petroleum Refinery Piping
- API Chapter 4 - Manual of Petroleum Measurement Standards, Proving Systems
- API Chapter 5 - Manual of Petroleum Measurement Standards
- NEMA 7 and 9 - Class I, Group D, Division 1 and 2 Areas (Explosion-Proof)

Standard Equipment

- Four-way valve with electric actuator for local and/or remote operation. Seal indicating device.
- Two detector switches - high resolution.
- One spheroid.
- Two 1/2" NPT pressure gauges complete with 1/2" NPT isolating valve.
- Two thermometers complete with 3/4" stainless steel thermowells.
- Two 1/2" vent valves on top of each launching chamber.
- One thermal relief valve, 1" NPT.
- Two drain connections complete with R.F.W.N. flange.
- Three instruction and equipment manuals.

The specifications contained herein are subject to change without notice and any user of said specifications should verify from the manufacturer that the specifications are currently in effect. Otherwise, the manufacturer assumes no responsibility for the use of specifications which may have been changed and are no longer in effect.

Headquarters:
1803 Gears Road, Houston, TX 77067 USA, Phone: 281/260-2190, Fax: 281/260-2191

Gas Measurement Products:
Houston, TX USA Phone 281/260-2190
Thetford, England Phone (44) 1842-82-2900
Kongsberg, Norway Phone (47) 32/286-700
Buenos Aires, Argentina Phone 54 (11) 4312-4736

Integrated Measurement Systems:
Corpus Christi, TX USA Phone 361/289-3400
Kongsberg, Norway Phone (47) 32/286-700
San Juan, Puerto Rico Phone 787/274-3760
United Arab Emirates, Dubai Phone 971 +4/331-3646

Liquid Measurement Products:
Erie, PA USA Phone 814/898-5000
Los Angeles, CA USA Phone 661/702-8660
Slough, England Phone (44) 1753-57-1515
Ellerbek, Germany Phone (49) 4101-3040
Barcelona, Spain Phone (34) 93/201-0989
Moscow, Russia Phone (7) 495/564-8705
Melbourne, Australia Phone (61) 3/9807-2818
Beijing, China Phone (86) 10/6500-2251
Singapore Phone (65) 6861-3011
Chennai, India Phone (91) 44/450-4400

Visit our website at www.fmctechnologies.com

Printed in U.S.A. © 6/92 FMC Technologies Measurement Solutions, Inc. All rights reserved. SS0V002 Issue/Rev. 0.1 (5/89)